LOUISIANA COOPERATIVE EXTENSION SERVICE
LOUISIANA STATE UNIVERSITY AGRICULTURAL CENTER

Production and Marketing of Louisiana Pine Straw

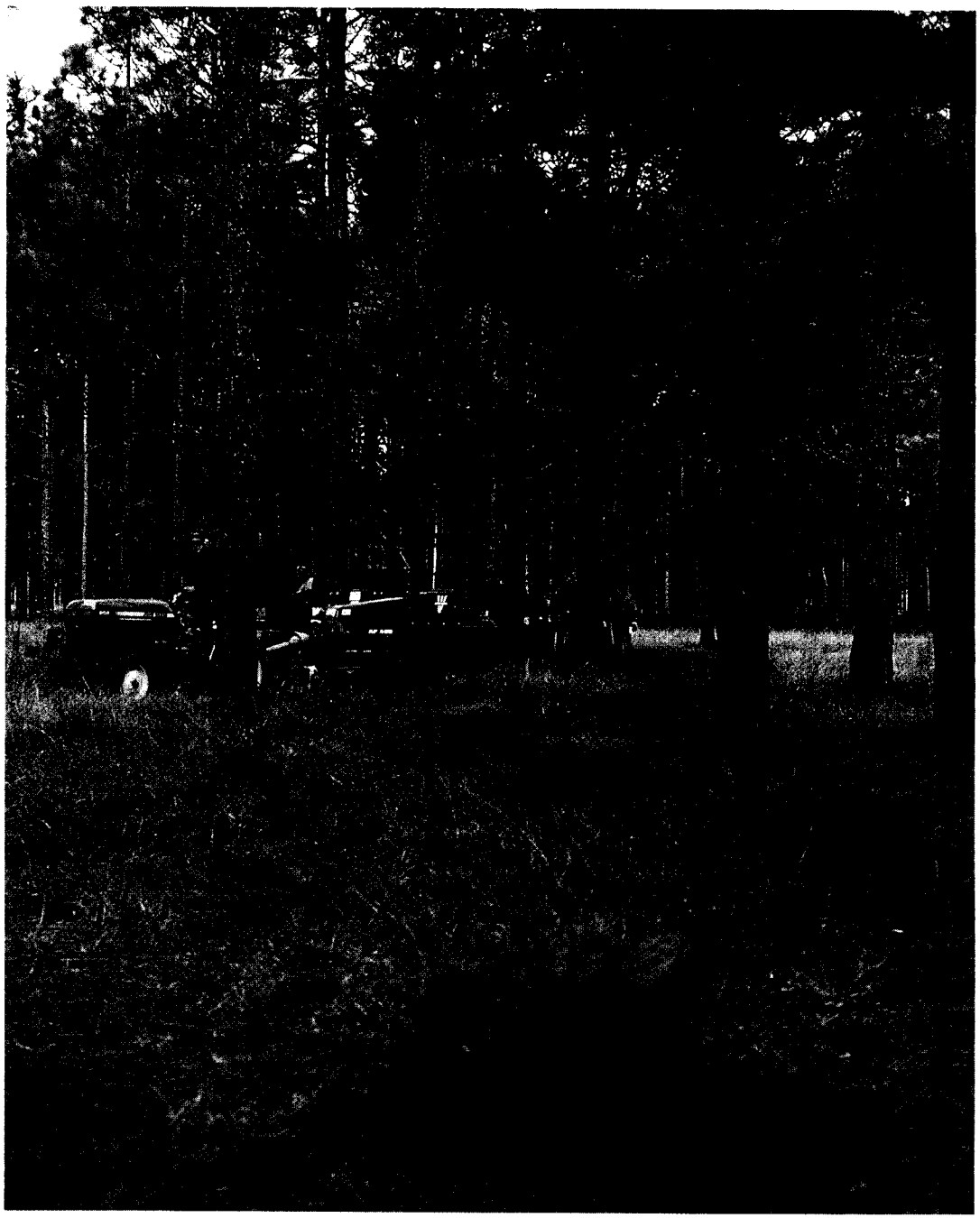

Production and Marketing of Louisiana Pine Straw

A naturally occurring product of the pine tree, pine straw may have a future as a promising new industry for Louisiana. The needles naturally shed by longleaf, slash and loblolly pine trees could provide a financial boost to Louisiana forestland owners and to the state's agricultural economy.

North Carolina has a pine straw industry in which retail sales reached $10 million several years ago. Experts there believe that this total can easily be doubled or tripled with increased awareness. Proper promotion of pine straw as a new garden product in the major urban markets of the East could also increase profit.

A few nurseries and garden centers in Louisiana sell straw in 40-to 50- pound bales for $8 a bale.

The largest acreage of planted longleaf and slash pines is in Beauregard Parish. Most easily adaptable acreage is in the southeastern and southwestern area of the state. Louisiana has few people engaged in harvesting pine straw. At present the large bale (40-50 lbs.) sells for $4 at the barn or $4.50 delivered to Baton Rouge or other nearby locations. Wholesale prices for the same size of bale delivered to other metropolitan areas in the Southeast are generally $3.75 in truckload lots.

North Carolina, Georgia and Florida are leaders in the pine straw mulch industry. North Carolina claims to have more than 100 individuals in the pine straw business. They employ more than 20,000 people and gross more than $10,000,000 annually. It is estimated that North Carolina had an estimated total of 581,000 acres of longleaf pine in 1984; Louisiana had more than 930,000 acres of predominantly longleaf and slash pine that same year.

North Carolina has shortened bales for easier shipping and handling. Bales often measure 12" x 16" wide and 24-27" long and weigh 30-35 lbs. A preference for smaller, lighter bales is evident. Standardization of bale size is one area in which marketing could be greatly enhanced. North Carolina has several collection points (or middlemen) that buy loose straw from small growers and bale at the site. In the future, Louisiana's industry might benefit by having more collection points and pooling resources to supply large purchases.

The easiest way to get started in pine straw management is in an already established stand of pines at least eight years old. Two pine species, slash and longleaf, produce the best straw for baling. Needles of the other

pines may be too short to be baled properly and may not hold together in bales. However, they may be marketable in bags or by wrapping bales with a material that will hold the straw together, as firewood is bundled in plastic wrap.

The pine stand to be raked must contain undecayed fresh pine straw, be mostly free of other vegetation in the understory and be clear of twigs and limbs before raking.

Some concerns in pine straw management are the possible negative effects of removing straw on tree growth, erosion and soil productivity. Pine needles serve as a cover for the soil, and the needles also recycle many of the nutrients that pine trees need for growth. When all of the pine needles are removed, the soil is exposed to erosion, and nutrients are removed from the ecosystem. However, most operations leave on the soil a coating of vegetation or organic matter which has sifted through the rakes.

Pine Needle Fall

Pine needles stay on a tree for two years, after which they turn brown and fall from the tree. This can occur any time during the year, but the greatest needle fall is in September through December. Consequently, the best time to rake needles is during winter and early spring because the weather is cooler, understory vegetation is at a minimum and needle fall has occurred.

Florida extension publications indicate that needle fall in a pine stand increases with age up to 15 years (Figure 1). There is a slight decline in needle fall after age 15, but it remains relatively constant through age 35. At age 10, yield can range between 125 to 200 (40-pound) bales per acre. The maximum yield is at about age 15 (200 to 300 bales) Table 1.

Figure 1. Straw Yield by Age - Annual pine needle fall over 35 years in a slash pine plantation.

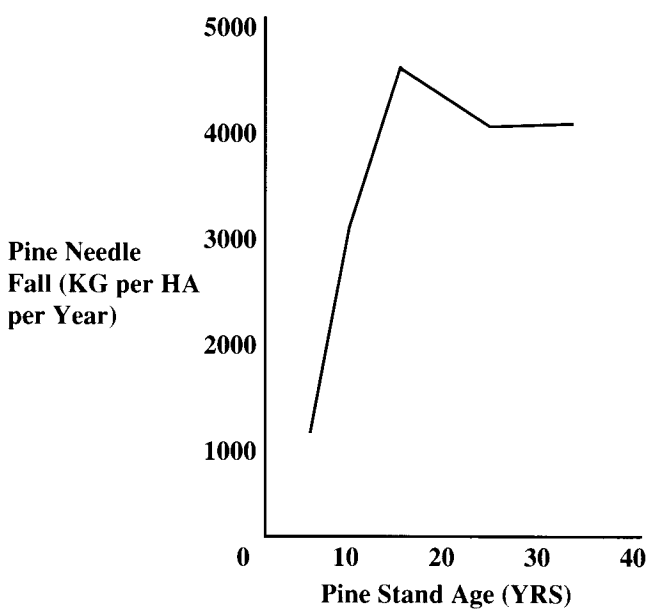

Table 1. LSU Research Study of Average Annual Straw Yield Per Acre. 1953-58. By Basal Area Groups - S.E. Louisiana

Basal area per acre after second thinning	Average annual yield
Square feet/acre	pounds/acre
74 (100 trees per acre)	3740
80	4065
90	4315
100	4750
127 (check)	5255

Bateman and Wilson, 1961

Equipment and Personnel

Many farmers already have the equipment needed unless they begin a large commercial endeavor. Basic equipment includes a hay rake, mechanical baler, small tractor, equipment trailer, storage barn and truck. Some people use an old style, dump rake which can go between trees more easily, can be lifted over obstructions and will windrow straw. Baling twine should be nylon to prevent water and other deterioration common with grass twine.

Most crews have from two to five people. One person usually rakes straw away from trees and removes trash, limbs, cones and knots from the straw. Another person drives a tractor with a rake and windrows the straw for baling. A tractor with a mechanical baler bales the straw from rows.

Balers must be adjusted so that twine is tight enough to hold the bale securely without breaking the twine. Sometimes balers can be adapted to different sizes of bales for customer orders. Balers can also be operated as stationary units where straw is brought to the machine. Often, contracted straw (straw bought in bulk or loose) can be delivered to a central baling location.

A plan for a hand-operated baler is included in this publication. A hand-operated baler has limitations because of intensive labor requirements, slow production and problems in getting twine tight enough to hold straw together.

Some type of wrapping, bagging or binding machine may solve the hand-baler packaging problem. Packaging innovations would also be helpful for mass marketing to consumers.

Straw bales should be protected from rain to prevent molding. Ants, excess litter, grass and leaves should be excluded when baling. Sometimes second grade straw can be sold at a discount. Be especially careful to avoid obnoxious seeds and weeds, such as bahiagrass, that would be a problem in handling or in landscapes.

Managing Timber for Pine Straw

Compatible management systems have long been used in coastal plain forests of longleaf, slash and loblolly. These forests respond well to frequent prescribed burning, grazing of livestock and use of herbicides needed to keep understories open. These forests are also primarily level to rolling, they are little affected by erosion, and they have sandy soils which can be worked without severe bogging in wet weather.

Because of adaptability to prescribed burning, grazing and the open character of coastal plain pine forests, they can be successfully managed for pine straw. Even loblolly pine, before the use of plastic mulch, was a preferred straw species.

LSU researchers found loblolly straw to be preferred over longleaf straw by strawberry growers because it was easier to apply as a mulch. However, loblolly bales do not hold together well because of their shorter needles.

Harvesting and regeneration of timber stands is a necessity because growth produces overcrowded stands, and insects, diseases, age and mortality cause constant changes. A well-managed forest will produce substantial timber growth, straw, forest products, grazing and recreation.

Proper timber thinning is needed to maintain long, clear trunks with well-rounded crowns while producing good growth and straw. A young, vigorously growing pine forest is more productive for timber and straw than a declining forest. The most rapid tree growth and best straw production are in forests less than 40 years old.

Management Plan

Long-term successful management of a property requires a written management plan. The first step is to inventory the forest resource. Include data on tree density, species, size, quality, needs and stand mapping. Then objectives, desires, species, needs, finances, products and resources can be blended. A professional forester can help with this task. Professional foresters are readily available in Louisiana and some, such as industry or consulting foresters, may provide a complete management service.

Weed and Brush Control

The lowering of straw quality caused by debris or grass makes preparation and picking up among the most important tasks of managing a forest for pine straw production. Understory control usually includes frequent prescribed burning, herbicide application, grazing and mechanical control

(usually bush hogging). Occasionally a dozer will be needed to clear dense areas, tree tops, debris and to fill in holes. Be careful with mechanical equipment, such as dozers, so that topsoil is not removed or trees damaged. Prescribed burning in the fall may be advantageous because it produces good understory control, brush and debris are burned up, the forest floor is prepared for raking and grass will regrow in time to form sufficient cover to protect the soil. Prescribed burning can distribute livestock which are attracted to a burned area.

A low growing grass, such as carpetgrass, adds livestock forage, helps prevent weeds and brush, and forms a soil protecting layer to help prevent erosion and to add organic matter. Fertilization improves quality of grazing, tree growth and possibly increases straw yields. Use soil tests to guide fertilization.

Chemical weed and brush control may include both sprays and injection. A persistent herbicide must be applied early enough so that it does not leave a residue that affects straw use. Generally several herbicides may be needed because no one herbicide will control all species. County agents can provide information on proper herbicide application.

Tree Density and Thinning

Tree thinning to maintain proper densities, crown (top) size and for some shading of understories, while maintaining proper tree growth and spacing, requires careful monitoring and manipulating of the stand. Thinning systems can be manipulated to produce clear logs on a long rotation (such as 40 years) while supplying straw yields by using either basal areas or crown ratios as guides. LSU researchers suggested a guide basal area of 80 square feet or a crown ratio in codominants of 40 percent (Figure 2). However, they preferred the easier guide of maintaining 30 to 40 percent of the total tree height of codominants in live crown because of its ease of selection in the field. They also recommended a five-year cutting cycle to keep the forest in a constant productive stage.

An even-aged system is the easiest to use since the same practice, such as burn-

Figure 2. Position of Trees by Structure

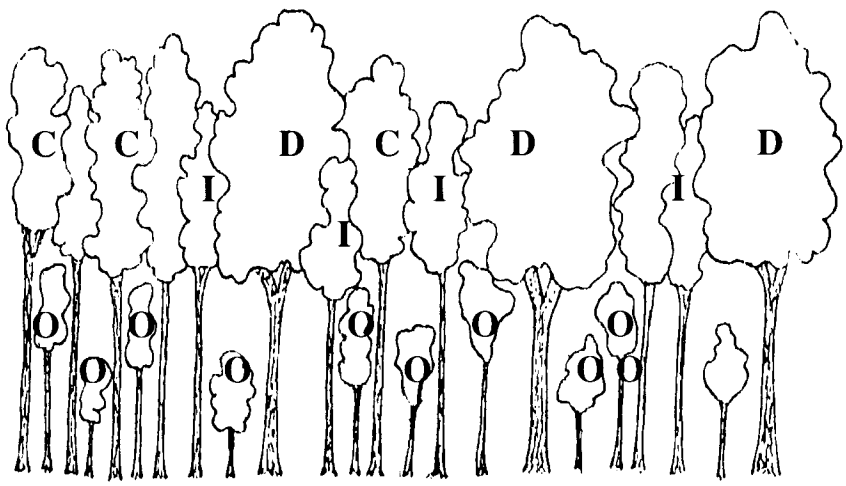

D= Dominant; crowns form upper level of timber canopy and receive light from above with well developed crowns but possibly a bit crowded on the sides.
C= Codominant; crowns form the general level of the canopy and receive full light from above, but little from the sides. Medium-sized crowns, somewhat crowded on the sides.
I=Intermediate; shorter, but crowns extend into the canopy formed by the dominants and codominants. Receive a little direct light from above, but none from the sides. Small crowns, very crowded on the sides.
O=Overtopped or suppressed; crowns are entirely below the general crown canopy. Receive no direct light either from above or from the sides.

ing, can be applied to the entire area without harming regeneration or causing other damages. With this system young trees can be grown dense enough to induce early natural pruning to produce a tree clear of knots in the bottom logs while obtaining good diameter and height growth. In a larger forest, portions of a tract can be in different even-aged groups so that all of the tract will not need regeneration at the same time. This produces continuous straw harvest without lost time.

Early thinning produces trees with proper live crowns and diameters. Dense, young stands with small crowns should be thinned as early as possible to allow room for crown spreading. Overtopped and small intermediate trees should be cut because they are not efficient. They take away from crop trees and interfere with straw raking unless they are needed to replace larger trees. Thinning early from below is usually the best management system for timber production, too.

The following guide for thinning a stand is based on live-crown ratio, while maintaining about 80 square feet of basal area that is often a thinning threshold. LSU researchers provided these suggestions based upon their straw management experience and research (see Figure 2):

I. In thick young stands

A. Thin to maintain 33 to 40 percent of the total crown of codominants in live crown.

1. Remove overtopped trees if merchantable.
2. Remove intermediates if merchantable unless needed for crop trees.
3. Remove diseased, crooked and low-quality codominants, unless large holes will be made in the canopy.

II. Second and later thinning in stands previously thinned

A. Thin to secure even radial growth of wood; maintain live crown on dominants of not less than one-third the total tree height.

1. Remove most intermediates.
2. Remove poor-quality codominants left in first cut so large opening will not be made.

B. Thin when the codominants have three 16-foot logs free of live limbs, even though one-third or more of total height is in live crown. Follow rules under II-A above.

C. Thin so as to maintain codominants with nearly 40 percent of total height in live crown as stands grow older. Openings should be kept relatively small in older stands.

III. In stands that were open or not thick when young

A. Thin when young if trunk canker is present on many trees.

B. Thin when the live crown of codominants is reduced to 33 to 40 percent of the total height of tree.

1. Remove overtopped trees.
2. Remove intermediate trees, if not needed for crop trees.
3. Remove poor-quality codominants, if permanent hole will not be made.
4. Remove other codominants or dominants where growing space is needed.

C. Thin when codominant trees have three 16-foot logs free of live limbs.

1. Remove overtopped trees.
2. Remove intermediate trees if not needed for crop trees.
3. Remove poor quality trees in upper crown classes where permanent holes will not be made.

D. Thin as needed so as to maintain about 40 percent of tree height of codominants in live crown.

Timber Regeneration

The rotation, or age of trees at the final cut, should be based on growth and quality, species and stand condition. A 1983 U.S. Forest Service longleaf pine publication suggested harvesting at age 60. LSU researchers said the shelterwood system seemed best suited if natural reproduction is desired. It offers three advantages over other methods. (1) Reproduction is secured quickly. (2) A partial straw harvest is possible until reproduction is established. (3) Hardwood brush may be held in check.

The shelterwood harvest should be a two-stage operation. Remove about 60 percent of the stems present, leaving the high-quality trees to produce seed for reproduction. Then, remove all remaining trees within two years after satisfactory reproduction has been established. The U.S. Forest Service publication suggested leaving 25-30 square feet of basal area per acre of evenly distributed seed trees more than 30 years old and 10 inches or more dbh for longleaf. They also recommended prescribed burning or soil scarification up to three months before seedfall to prepare the site for reproduction.

Clearcutting followed by artificial regeneration offers advantages, although it is more expensive than the shelterwood method. Regeneration can be secured quickly and evenly if genetically improved seedlings are planted with adequate spacing. Direct seeding with treated seed to prevent loss to birds and rodents can also be done successfully, but spacing of seedlings cannot be easily controlled.

The U.S. Forest Service publication recommended excluding livestock in regenerated stands until trees are 8-10 feet tall.

Summary:

Slash, longleaf and loblolly pine stands in Louisiana can be managed for pine straw by raking, baling and selling fallen pine needles while providing many other uses, such as timber grazing, recreation and watersheds. The use of loblolly pine straw will be limited until suitable baling or bagging systems are developed.

The greatest needle fall is in September through December, and the best time to rake needles is during winter and early spring while needles are fresh and understory vegetation is dormant.

Straw can be raked and can produce commercial yields in a pine stand as early as eight years of age. The maximum straw yield appears to be at about age 15. Maintain a codominant crown ratio of about 40 percent and basal area of about 80 square feet. Thin trees about every five years. A shelterwood regeneration system is cheap and provides some straw while the stand regenerates.

Regular prescribed burning and longer rotation will produce a scenic forest with multiple uses.

The management steps for a successful pine straw operation include developing a management plan, controlling weeds, raking and baling pine straw, and selling the pine straw. Fertilizing the pine stand may increase tree growth and pine straw production. Grazing livestock can reduce understory density and improve straw yield while reducing management costs.

Planting low growing grasses (such as carpetgrass) can reduce understory weeds, as well as help prevent soil erosion and compaction after raking. Fertilizing a short type of grass may encourage it to spread, improve grazing and straw fall, and may benefit trees. Be careful when raking areas of "pest" grasses and weeds (such as bahiagrass and briers) to avoid baling any seed or grasses which may become problems.

Louisiana Pine Straw Market Analysis

In 1989 the Louisiana Cooperative Extension Service surveyed nurserymen and landscape architects. The survey revealed the following: Pine bark is the major mulching material used by landscapers. Pine straw is second. Most landscapers indicated a desire to increase their usage of pine straw.

Spring is the prime time for mulch usage, followed by fall. Because pine straw is harvested primarily in the winter and peak demand is seasonal, a producer or broker will need adequate storage to market pine straw.

Landscapers purchase most of their mulch from wholesalers. Retail nurseries are a distant second.

Appearance is the main consideration landscapers gave for choosing their mulching material, followed by ease of use. Cost is third. An attractive, quality product seems to be more important than cost.

Of the landscapers responding, almost 70 percent have considered pine straw as a mulch. Approximately 78 percent of those who use pine bark as a mulch indicated they would consider changing. This may indicate the potential for increased market share for pine straw.

Of the landscapers now using pine straw, 49 percent of those responding rake the straw themselves, and 51 percent obtain straw from other sources.

Eighty-two percent of landscapers responding indicated that they would rather purchase pine straw from a nursery if it is competitively priced with other mulches. Landscapers would rather buy pine straw than rake and bale straw themselves.

The most frequent comment made by landscapers was that reliable suppliers of pine straw are not available. Few listed producers or wholesalers as sources, and two bought straw from Mississippi, Alabama and Georgia. There appears to be significant market opportunity for producers and wholesale brokers of pine straw because current supplies do not meet demands during spring and fall.

Conclusions

Most Louisiana nurserymen responding to the questionnaire (77 percent) sell mulching material. Seventy-three percent indicated that pine bark represented most of their sales, followed by cy-

press mulch (15 percent). Only 2 percent indicated that pine straw represented the bulk of their sales of mulch.

Responding nurserymen indicated that their mulch sales volume was about equally divided between landscapers and retail customers. Sixty-six percent of the nurserymen do not sell mulch in bulk. More than 90 percent sell mulch bagged and not in large bulk containers.

Nurserymen responding (64 percent) indicated that pine bark and pine bark nuggets were the preferred landscape mulch material in their area, followed by cypress mulch at 26 percent and pine straw a distant 12 percent.

When asked what marketing factors consumers most preferred, they mentioned cost most often (34 percent), followed by consumer preference at 27 percent. Cost was not a high preference factor with landscapers.

Peat moss and pine bark mulch were the .wo most used soil amendments closely followed by cow manure. When asked if shredded pine straw and composted leaves would have a market as a soil amendment, almost 80 percent answered yes. Baled or bagged was the top response (33 percent) when asked how this product could be sold.

When asked how many sold baled pine straw, 78 percent replied that they do not handle pine straw.

When asked if they are handling pine straw, and how many bales they handle annually, 64 percent responding handled fewer than 500 bales annually and only 2 percent responding handled 10,000 and or more bales.

Weed control, cost and attractive texture were the three top reasons given for using pine straw.

Only about 45 percent of the nurserymen responding indicated that they have requests for baled pine straw. Consumer education and promotional materials are needed.

Those nurserymen not handling pine straw gave the main reasons as not receiving enough requests by customers, lack of dependable suppliers and no sales effort being made. These problems can be positively addressed by the industry.

Probably the most encouraging survey questions are those concerning marketing and promotion. Seventy-six percent of nurserymen responding indicated that they would begin handling pine straw if the straw was placed on consignment. Eighty-one percent responded that they would consider handling pine straw if the names of Louisiana pine straw wholesalers were furnished. An overwhelming 87 percent indicated that they would distribute straw promotional material if it were provided.

Almost 70 percent of nurserymen responding were satisfied with the standard bale size. Only 10 percent thought going to a smaller bale would be better. Further research might indicate, however, that small bales or plastic packaging might appeal to some customers. When asked if they would prefer an even smaller bale size than currently offered, 84 percent said no. Hardly anyone offered an alternative packaging preference.

Louisiana pine forests consist mostly of slash and loblolly pine. Longleaf is a minority acreage. An encouraging 83 percent of nurserymen responding thought slash and loblolly straw would sell. This holds promise for straw sales development of these predominant pine species.

When asked if less than premium longleaf straw was sold at reduced prices, 76 percent indicated that there would be a market for this straw.

Both the landscaper and nuserymen questionnaires seem to indicate the following: An apparent demand exists for Louisiana- produced pine straw both as a mulch and as a soil amendment.

The present standard bale seems to be the package size preference, although market research could show smaller bales advantageous at a later time.

The majority of landscapers and nurserymen want to use Louisiana pine straw.

Because the business is seasonable, producers need storage facilities to take advantage of all sale opportunities.

Slash and loblolly straw appear to be viable market species.

Literature Cited

Bateman, B.A. and W.F. Wilson, Jr. Management of Pine Stands for Straw and Timber Production. Louisiana State University, Agricultural Experiment Station Bulletin 543. June 1961. 23 p.

Duryea, M.L. and J.C. Edwards. Pine-Straw Management in Florida's Forests. Florida Cooperative Extension Service, IFAS, University of Florida, Gainesville, Florida. Cir. 831. Aug. 1989. 6 p.

Dennington, R.W. and R.M. Farrar, Jr. Longleaf Pine Management. USDA, Forest Service, Forestry Report R8-FR3. Dec. 1983. 17 p.

May, D.M. and Bertelson, D.F.. Forest Statistics For Louisiana Parishes. USDA, Forest Service, Resource Bulletin SO-115. Dec. 1986. 59 p.

Funds provided by Louisiana Cooperative Extension Service; Louisiana Department of Agriculture, Bob Odom, Commissioner; and USDA- A.M.S. Federal/State Marketing Improvement Program.

Pine Straw Hand Baler Plans

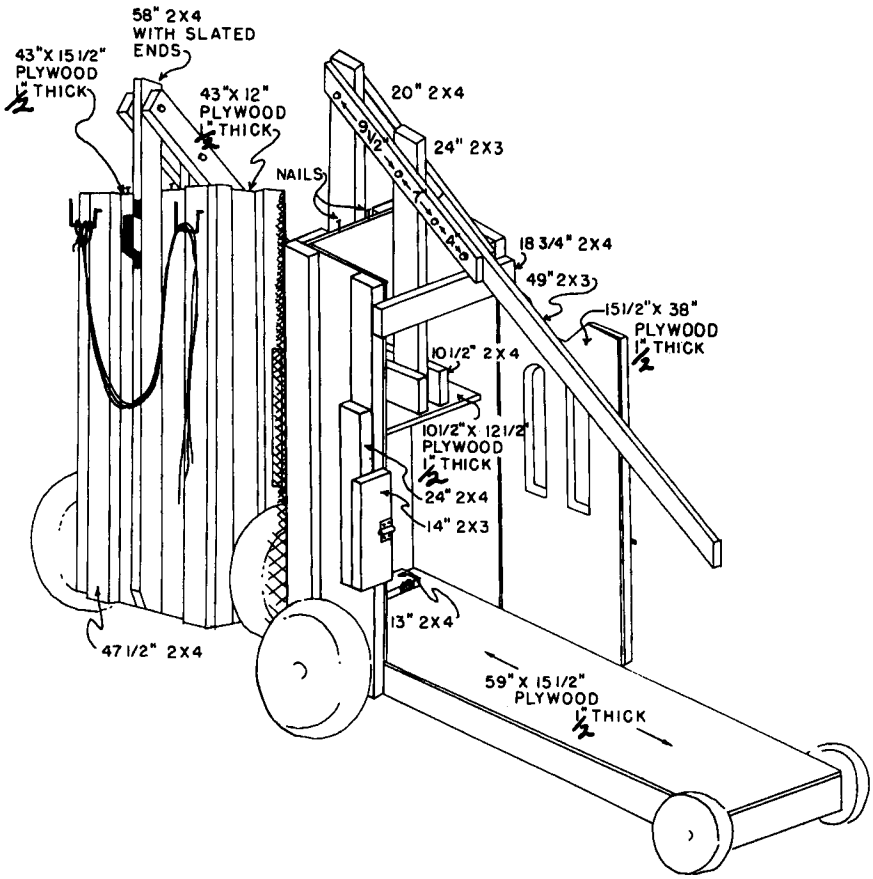

Dr. Robert Mills, Forestry Specialist
Dr. Daniel R. Robertson, Marketing Specialist

Louisiana State University Agricultural Center, H. Rouse Caffey, Chancellor
Louisiana Cooperative Extension Service, Denver T. Loupe, Vice-Chancellor and Director

Pub. 2430 (10M) 2/91

Issued in furtherance of Cooperative Extension work, Acts of Congress of May 8 and June 30, 1914, in cooperation with the United States Department of Agriculture. Louisiana Cooperative Extension Service follows a nondiscriminatory policy in programs and employment.